Device Modeling Report

COMPONENTS : VOLTAGE COMPARATOR (CMOS)
PART NUMBER : NJU7112AD
MANUFACTURER : NEW JAPAN RADIO

Bee Technologies Inc.

MODEL PARAMETER

Pspice model parameter	Model description
LEVEL	
L	Channel Length
W	Channel Width
KP	Transconductance
RS	Source Ohmic Resistance
RD	Ohmic Drain Resistance
VTO	Zero-bias Threshold Voltage
RDS	Drain-Source Shunt Resistance
TOX	Gate Oxide Thickness
CGSO	Zero-bias Gate-Source Capacitance
CGDO	Zero-bias Gate-Drain Capacitance
CBD	Zero-bias Bulk-Drain Junction Capacitance
MJ	Bulk Junction Grading Coefficient
PB	Bulk Junction Potential
FC	Bulk Junction Forward-bias Capacitance Coefficient
RG	Gate Ohmic Resistance
IS	Bulk Junction Saturation Current
N	Bulk Junction Emission Coefficient
RB	Bulk Series Resistance
PHI	Surface Inversion Potential
GAMMA	Body-effect Parameter
DELTA	Width effect on Threshold Voltage
ETA	Static Feedback on Threshold Voltage
THETA	Modility Modulation
KAPPA	Saturation Field Factor
VMAX	Maximum Drift Velocity of Carriers
XJ	Metallurgical Junction Depth
UO	Surface Mobility

Output Low Voltage

Simulation result

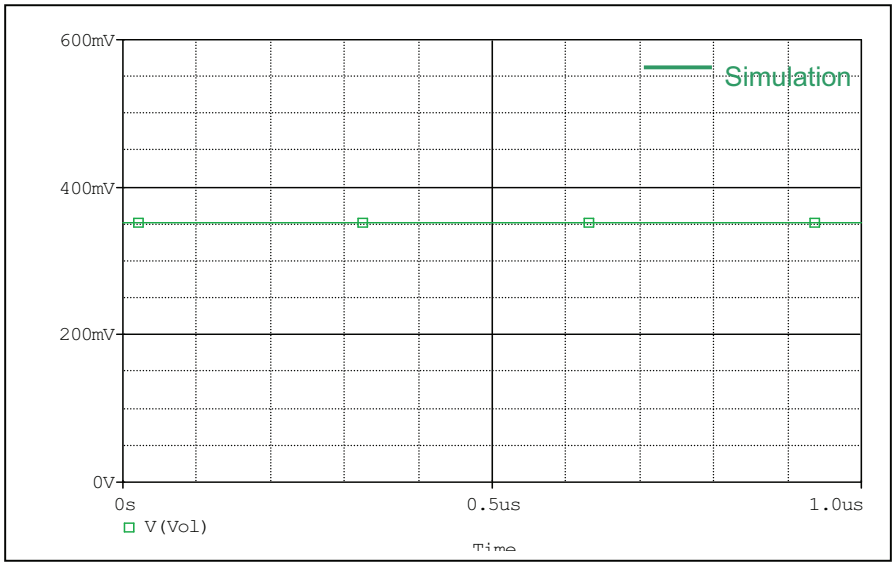

Evaluation Circuit

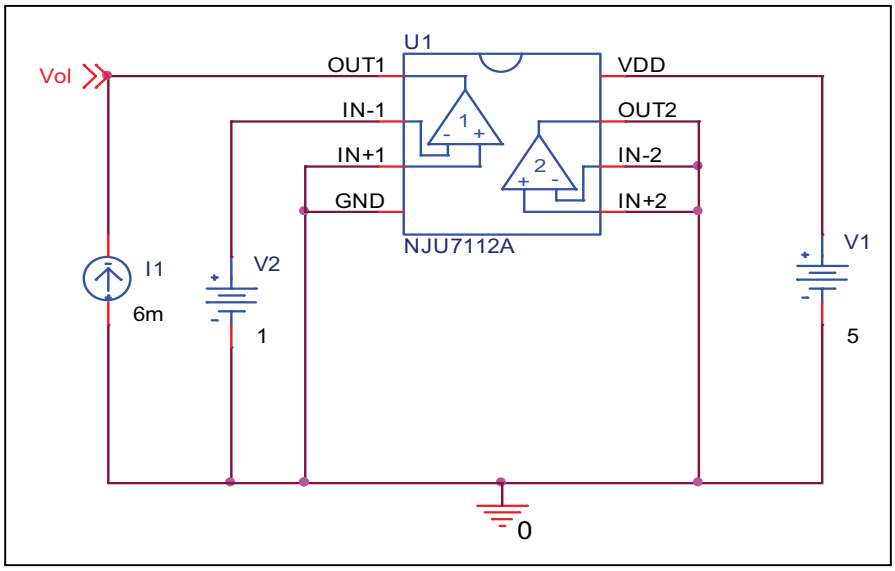

Comparison Table

I_{OL}=+6mA	Measurement	Simulation	%Error
V_{OL} (V)	0.350	0.351	0.286

Input Bias Current and Input Offset Current Characteristics

Simulation result

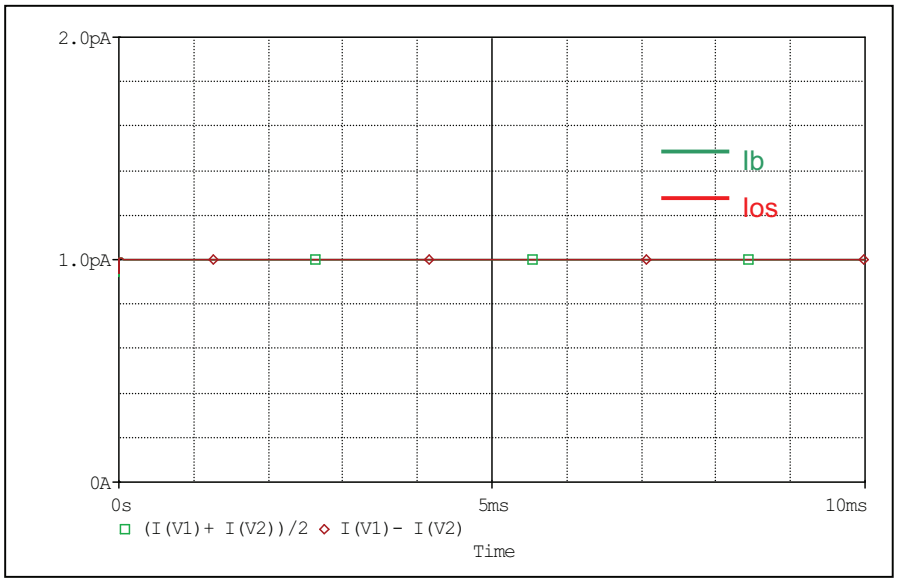

Evaluation Circuit

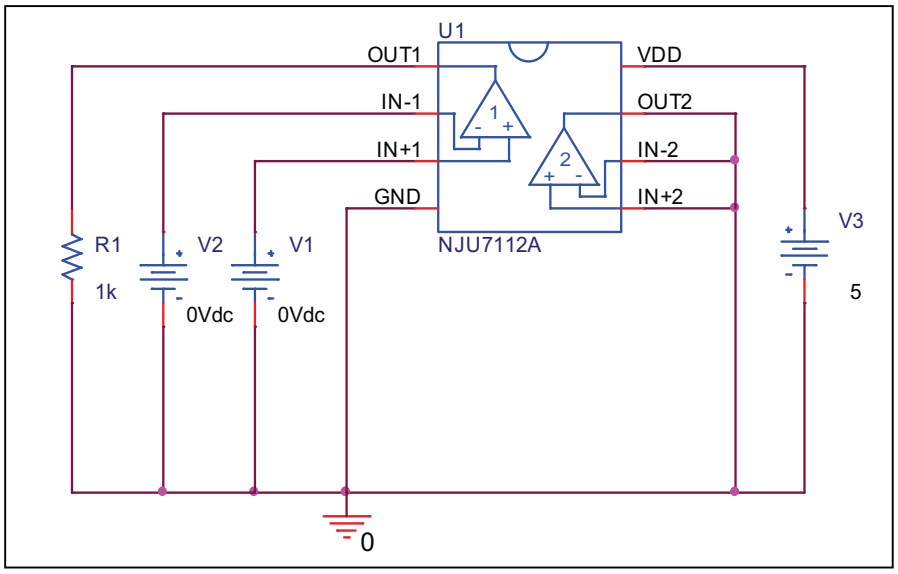

Comparison Table

	Measurement	Simulation	%Error
I_b (pA)	1.000	1.000	0.000
I_{os}(pA)	1.000	1.000	0.000

Input Offset Voltage Characteristics

Simulation result

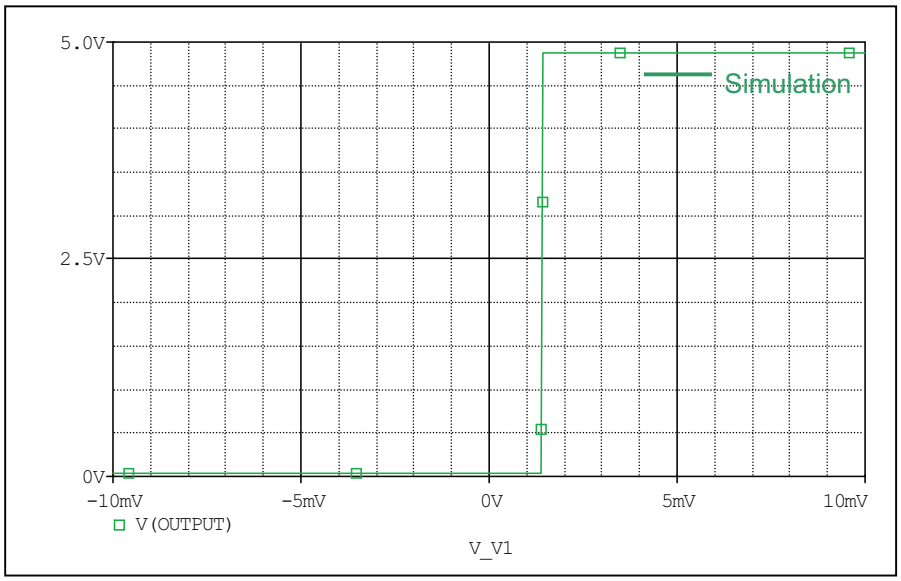

Evaluation Circuit

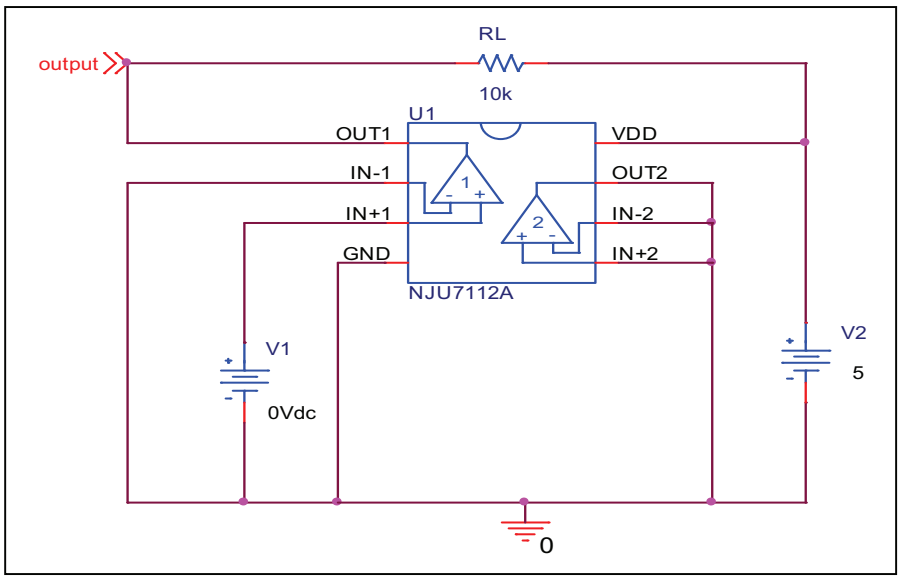

Comparison Table

	Measurement	Simulation	%Error
V_{IO} (mV)	1.400	1.405	0.357

Common-Mode Rejection Ratio

Simulation result

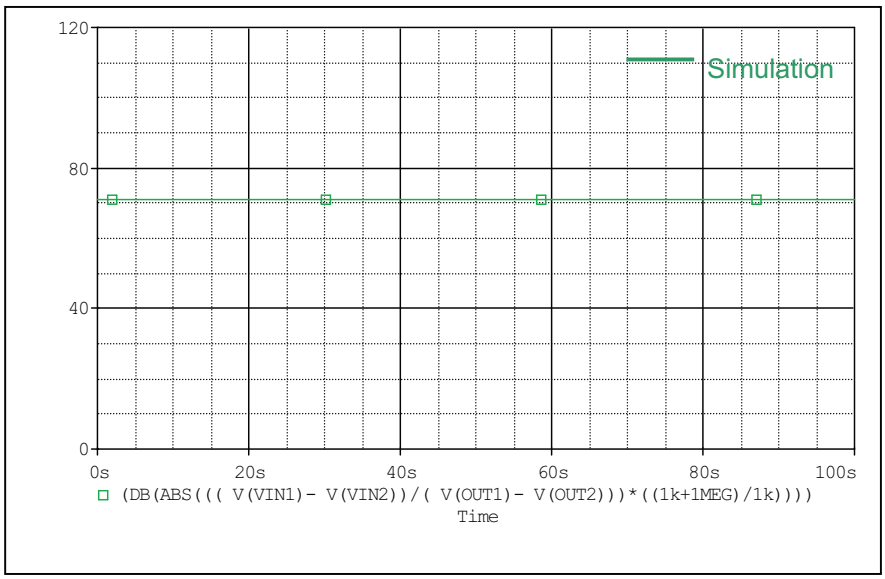

Evaluation Circuit

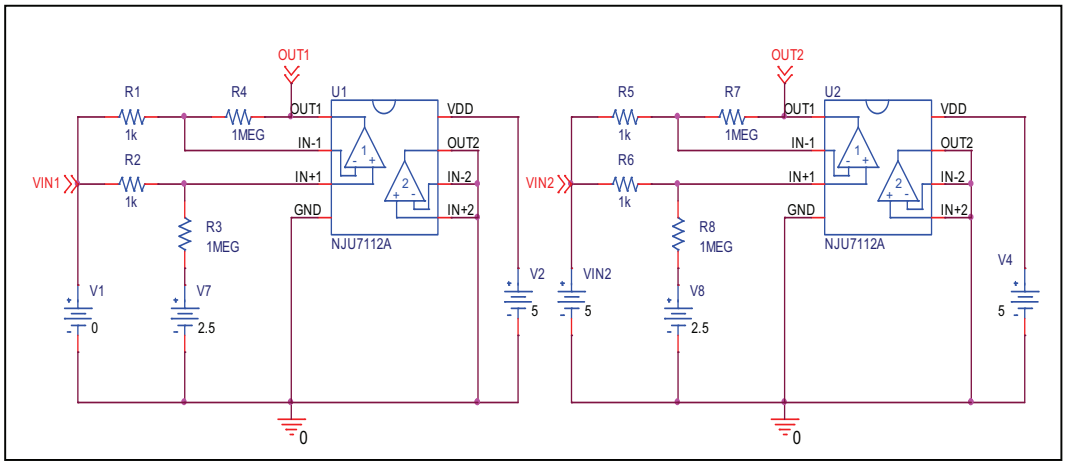

CMRR calculate from

CMRR = 20log (((V(VIN1)- V(VIN2))/(V(OUT1)- V(OUT2)))*((RF+RS)/RS))

Comparison Table

	Measurement	Simulation	%Error
CMRR (dB)	71.000	70.896	-0.146

Propagation Delay Time and Response Time

Simulation result

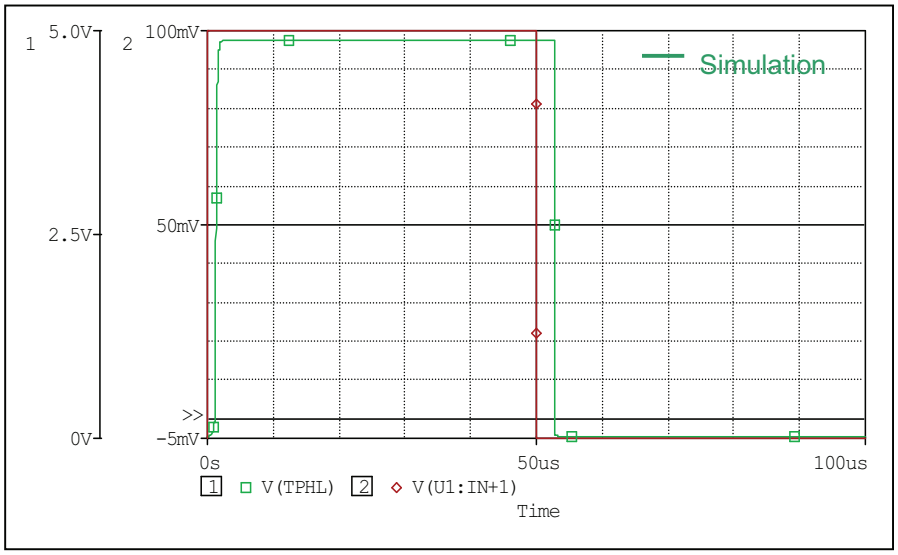

Evaluation Circuit

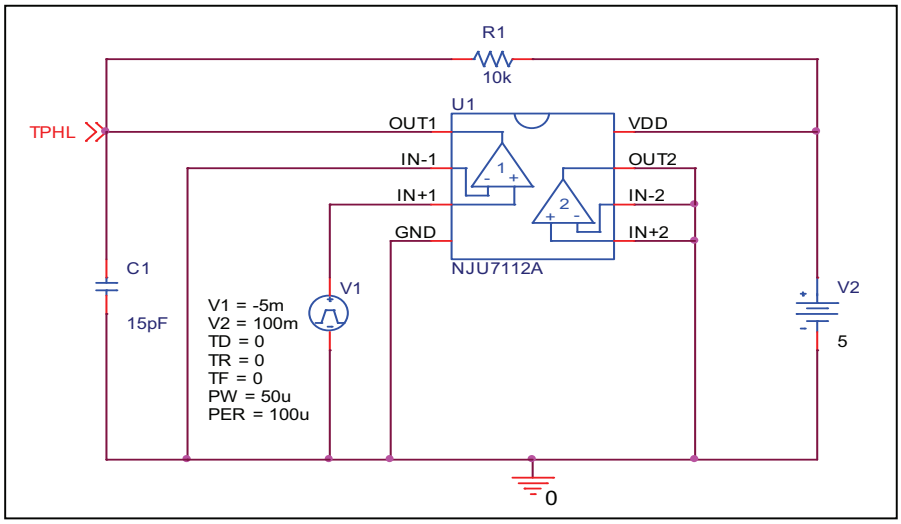

Comparison Table

Over drive=5mV	Measurement	Simulation	%Error
t_{PHL} (us)	2.700	2.763	2.333

Simulation result

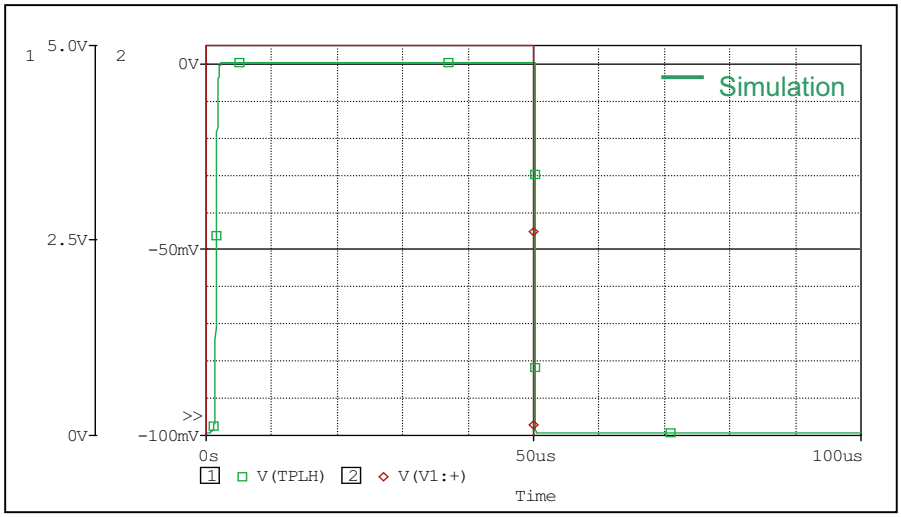

Evaluation Circuit

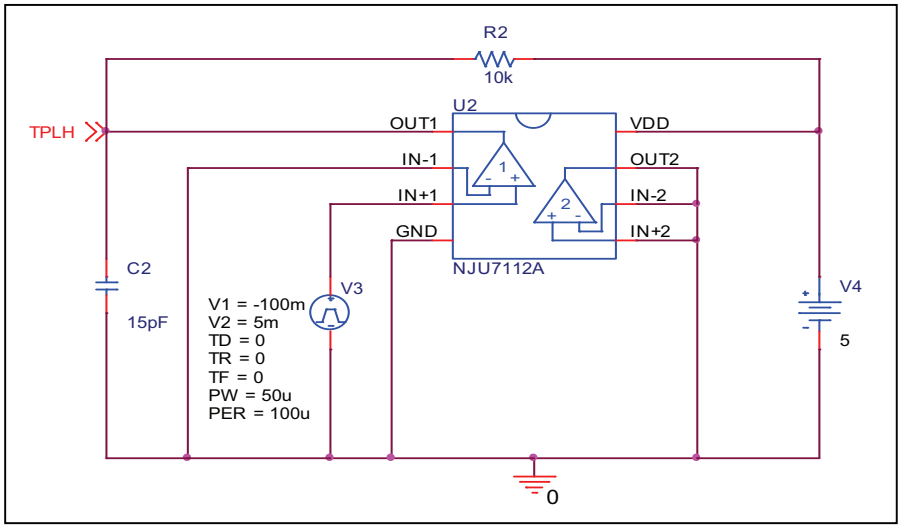

Comparison Table

Over drive=5mV	Measurement	Simulation	%Error
t_{PLH} (us)	1.500	1.508	0.533

Simulation result

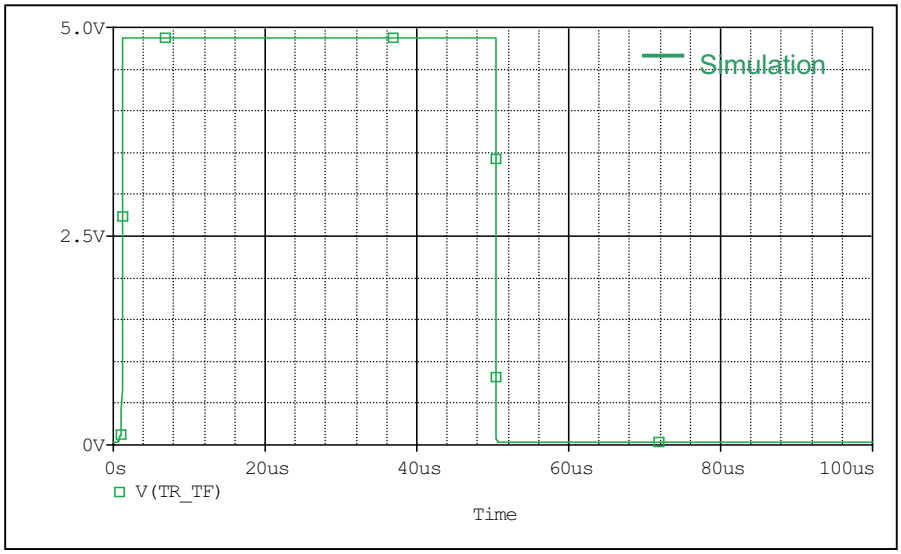

Evaluation Circuit

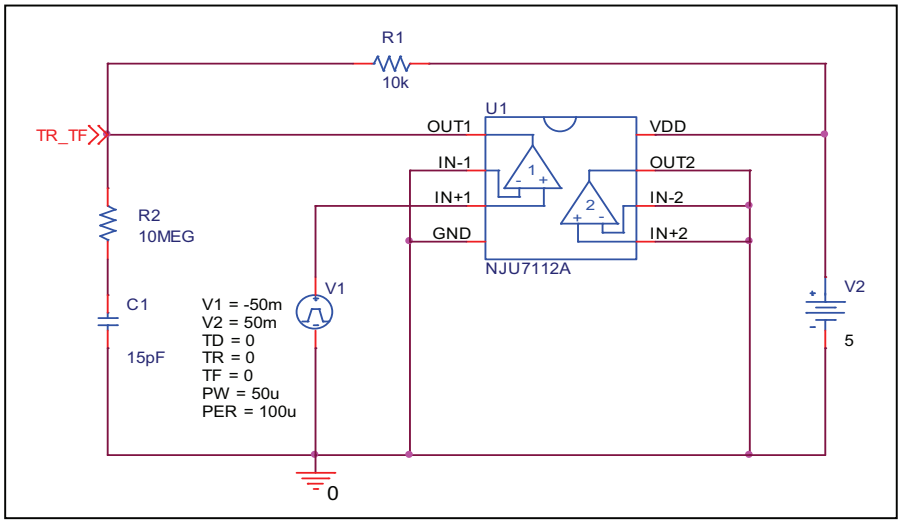

Comparison Table

Over drive=50mV	Measurement	Simulation	%Error
t_{THL} (ns)	20.000	20.660	3.300